Apex Shower Door Installation Guide

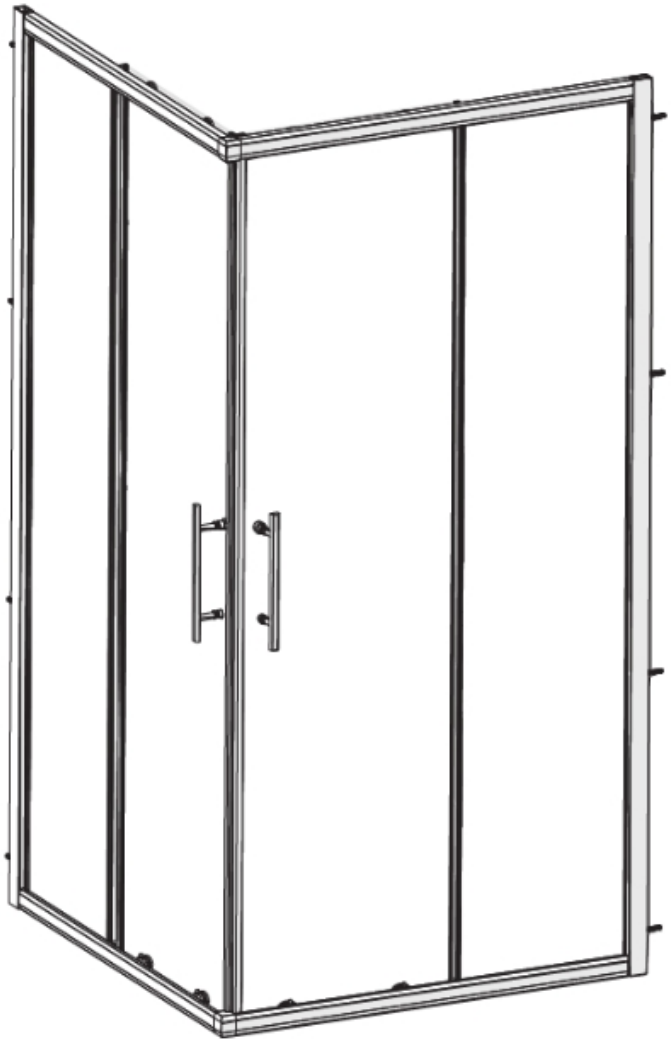

Our product may include updates without prior notice.

Thank you for your Order

Ph: 09-913-3110
116A Harris Road. East Tamaki
Auckland
sales@henrybrooks.co.nz
www.henrybrooks.co.nz

Preparation

Our products are designed to be safe, sanitary, and effective. Please read carefully the following instructions before installing your shower enclosure. If you have any questions on this shower enclosure installation, please call your local supplier.

Our product may include changes without prior notice..

A. After opening all the boxes, read this introduction carefully, and verify that all packed parts are complete by cross checking all components against the “Shower Door Components (Pg5)”. Examine for shipping damage. If the unit has been damaged or has a finishing defect, please contact your local supplier within 3 days.

B. Please note that you should consult your local building codes regarding installation and compliance standards. Building and plumbing codes vary by location, and your local dealers or distributors are not responsible for code compliance standards for your project.

C. Use a competent and licensed (if required by local code) plumber for all plumbing installation.

D. Please ensure that prior to installation the floor or shower tray step is level, if it is not level you will need to be very careful with installing the glass panels and may have other issues. Also make sure the walls are at right angles to the floor step. While some adjustment of the frame to the wall is possible, irregular floor level or improper angle of the side walls will result in issues for your installation.

Notes

Some adjustments and drilling will be necessary during the installation process.

Some of the tools below may not be needed for your specific installation.

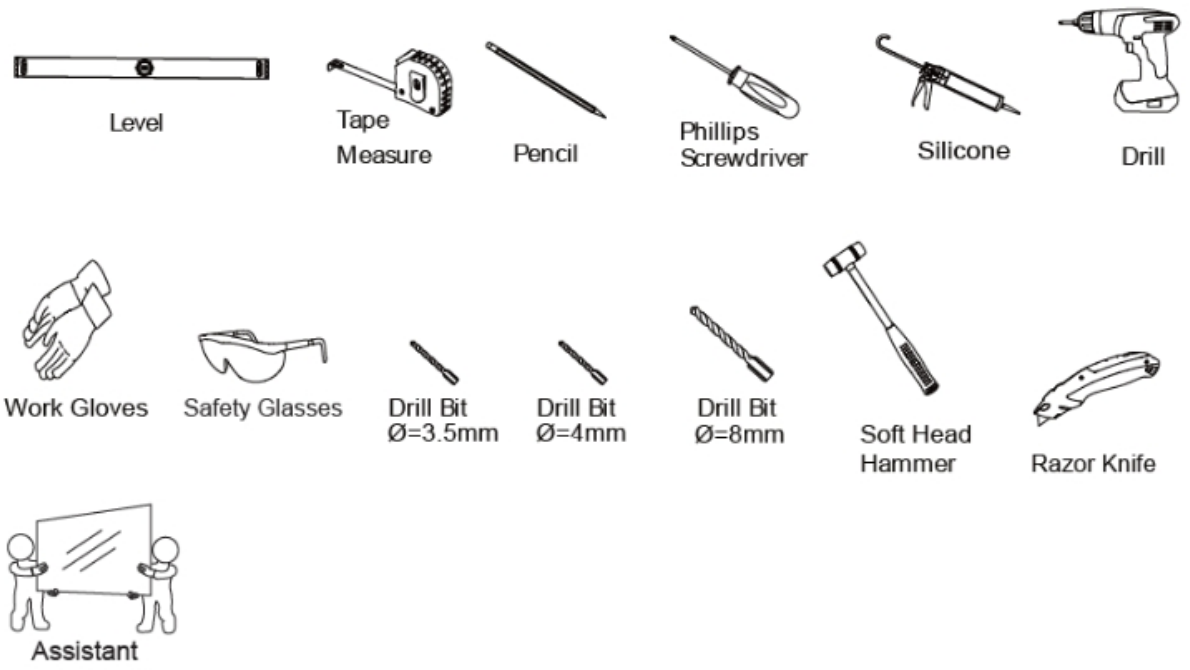

Tools Required

Recommended Wall Framework

To ensure a stable shower door installation we recommend installing extra framework where your shower door contacts the wall as shown in the image below.

With the shower tray in place determine the position of any extra framing.
To see separate tray and liner instructions, go to link below
https://www.henrybrooks.co.nz/installation-instructions/

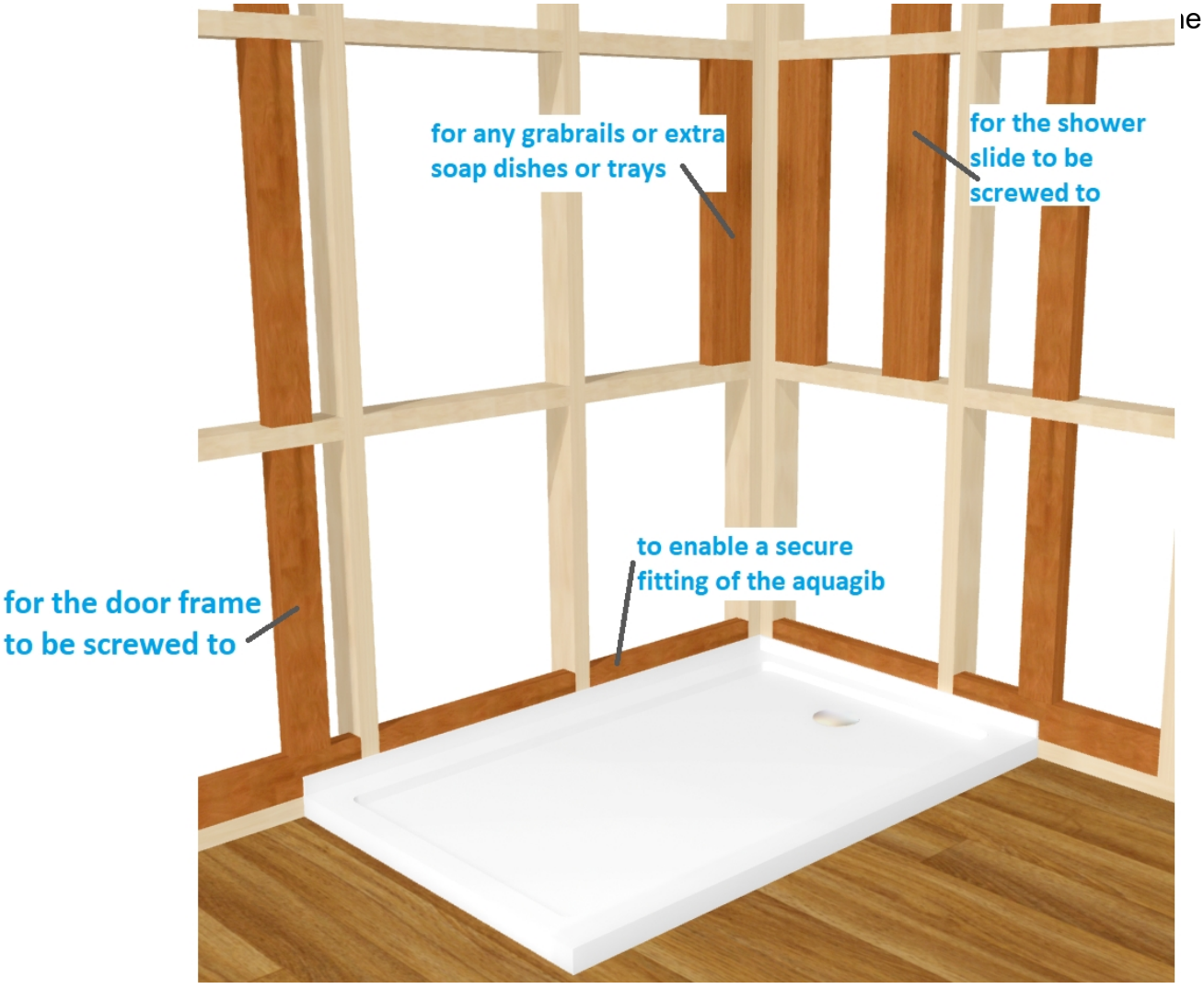



For further info on Shower tray preparation and install
Click on (or copy and paste into a browser)
https://www.youtube.com/watch?v=K38V9-wUvHg

Recommendations before you start

You should consult your local building codes on questions on installation compliance standards.
Building and plumbing codes vary by location, and our local dealers or distributors are not responsible for code compliance standards for your project.

Caution!

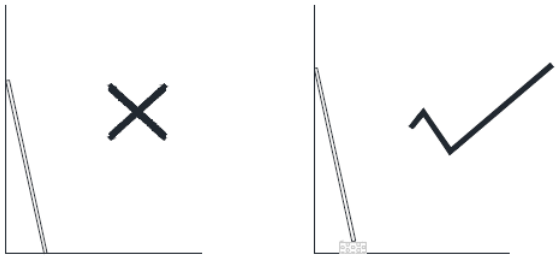

Supplied Wall anchors are for use on concrete walls and are NOT required for standard timber stud construction installations where appropriate wood has been fitted.

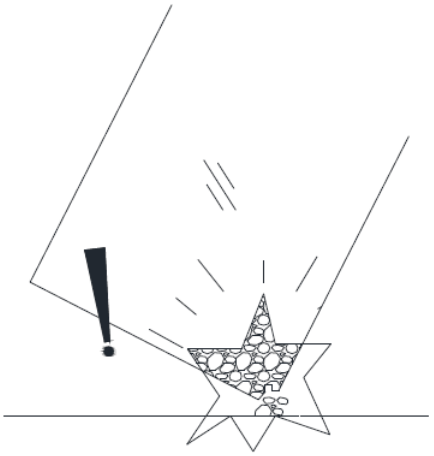

Please Note
The glass panels are tempered Safety Glass to the NZ/AS 2208.1996 safety standards.

When leaning them against a wall always protect the bottom edges and do not knock a corner against a hard surface as the glass panel may shatter.

These instructions assume that your plumbing, shower tray and wall linings are already installed level, plumb and square.

Installation Sequence

1st: Door Frame Assembly x2
2nd: Install the Wall Profile (#1) x2
3rd: Connecting the Frames together
4th: Fit the Stationary Glass Panels (#11) x2
5th: Fit the Door Assemblies (#16) x2
6th: Seal the Doors to the Shower (From the OUTSIDE only)
7th: Enjoy!

Apex Shower Door Components

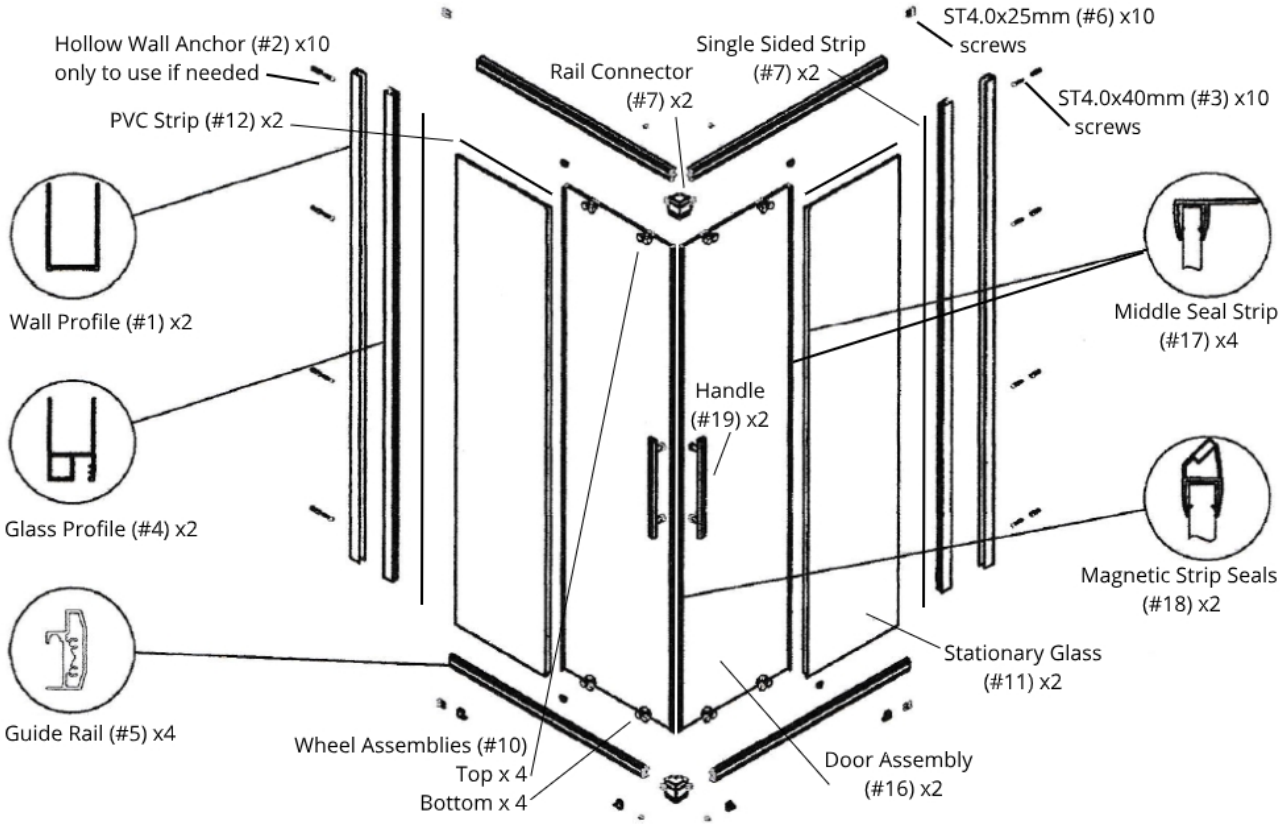

Parts List

01 Wall Profile x2	02 Wall Anchor,8mm x10	03 ST4.0X40 Truss Head Screw x10	04 Glass Profile x2	05 Guide Rail Assembly x4
06 ST4.0X25 Pan Head Screw x10	07 Rail connector x2	08 ST4.0X8 Pan Head B-point Screw x4	09 ST3.5X10 PanHead and screw caps x7	10 Wheel Assembly 4xTop 4xBottom
11 Stationary Glass x2	12 PVC Strip x2	13 Glass Clip x4	14 ST4.0×16 Countersunk Screw x4	15 Single Sided Strip x2
16 Door Assembly x2	17 6mm Middle Seal Strip x4	18 Magnetic Strip x2	19 Handle Assembly x2	

Door Frame Assembly

The door frame is in two parts and you need to assemble them separately before standing and fitting them together. These will be joined together in a later stage.

Connect the Top and Bottom rails to the glass profiles so that you end up with two 'U' shaped frames.

STEP 1 : Preparing the Frame
1) Use Drill and **ST4.0X25 Pan Head Screw(06)** (x2 each corner) to connect the **Guide Rail Assembly(05)** to the **Glass Profile(04)**. (A, B, C)
● It is recommended to operate in a flat, wide place.
● Upper/Bottom Guide Rail Assemblies only differ in directional placement towards the Glass **Profile(04)** center. Recommended to lay out all four pieces before attaching.
● The position of the hole on the rail assembly to the position of the Glass Profile must be L1 = L2. See diagram below.
2) Assemble the other frame in the same way.

Spec/mm	900	1000
L1=	340	390
L2=	340	390

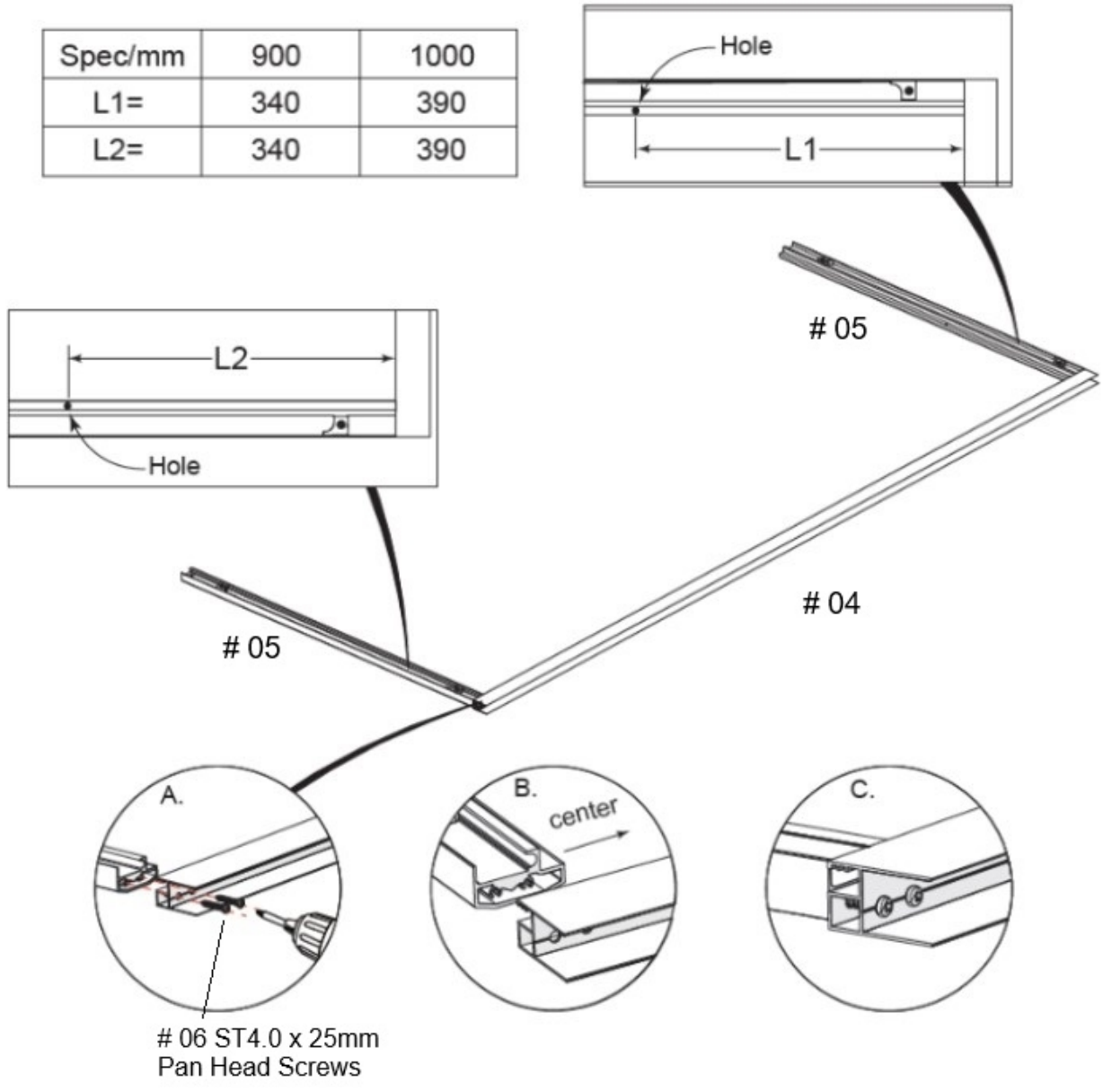

FIG 1

Install the Wall Profiles

STEP 2: Install the Wall Profiles

1) Using the chart below, determine the desired position of each **Wall Profile(01)** outer edge by measuring from the wall corner to a point that falls within the purchased size range.
If installing on a tray, mark the tray lip. If installing on a floor threshold, mark the floor surface.
Be sure the marked widths are equally distant from the wall corner (see diagram below).

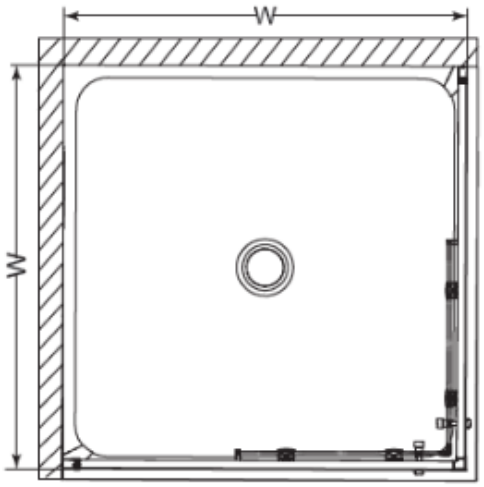

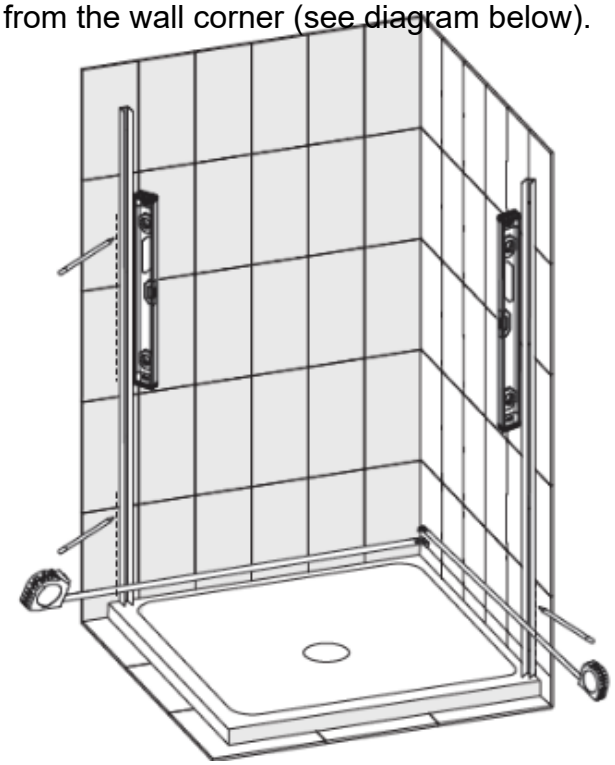

Spec/mm	900	1000
W	870 - 890	970 - 990

2) Stand the **Wall Profile(01)** upright with the outer edge positioned, ideally no less than 875mm from the wall liner. Hold a Level alongside the **Wall Profile(01)** edge. Ensure the **Wall Profile(01)** is precisely vertical. Use a Pencil to mark the wall surface at each hole position (4 in total).(A as below).

3) Set aside the **Wall Profile(01)** and drill holes (x4) at the marks using a 3mm Drill Bit. (B)
If you have a block or concrete wall use an 8mm drill bit for the wall anchor.
Tap in an 8mm **Wall Anchor(02)** (4pcs) into each hole with a Soft Head Hammer.

4) When fitting the **Wall Profile(01)** to the wall we recommend smearing a thin bead of silicone sealant between the back flat edge of the wall channel and the shower linings to give greater Water Proofing. Ensure silicone does not 'ooze' out from behind the channels (if it does, clean off immediately) when fixing them to the walls using the screws provided.

5) Repeat steps 2 - 4 to prepare the other **Wall Profile(01)** position.

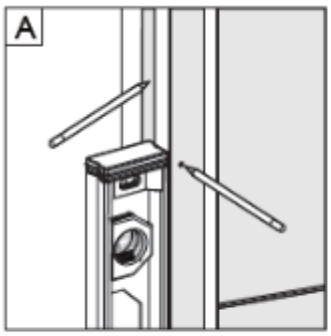

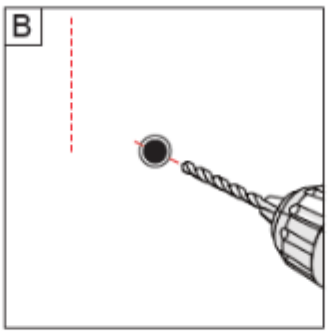

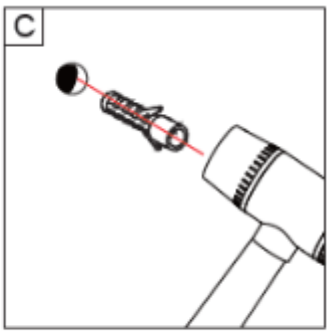

Connecting the Frames

Fig 2

STEP 3: Connecting the Frames

1) Insert each assembled frame (from STEP 1) into a **Wall Profile(01)** (A as below).
2) Insert the **Rail Connector(07)** (2pcs) at the top and bottom apex corners to connect the left and right frame assemblies together (B as below).
3) Using a 4mm Drill Bit, drill a hole into the **Rail Connector(07)** via the corresponding hole in the upper guide rail. (C as below) Drive a ST4.0X8 Pan Hand **B-point Screw(08)** in to affix the **Rail Connector(07)** (D as below).

- Do not drill through the guide rail's outer surface.
- Install the bottom **Rail Connector(07)** in the same way.

4) Using a 3.5mm Drill Bit, drill a hole ≥200mm from the top and bottom of the **Wall Profile(01)** inside the shower enclosure. Ensure that the hole is passing through both the Wall Profile and the Glass Profile (E&F below). Screw a ST3.5X10 **Pan Head Screw(09)** into the hole. Cover with a **Screw Cap(9)**. (G as below)

- In total, attach at three places along the **Wall Profile(01)**: top, center, and bottom.
- Repeat on the other wall.

This is your last chance to confirm your frame is plumb, level and square to the Shower Walls and Tray as you fit the door frame into the Wall Profiles (# 01)

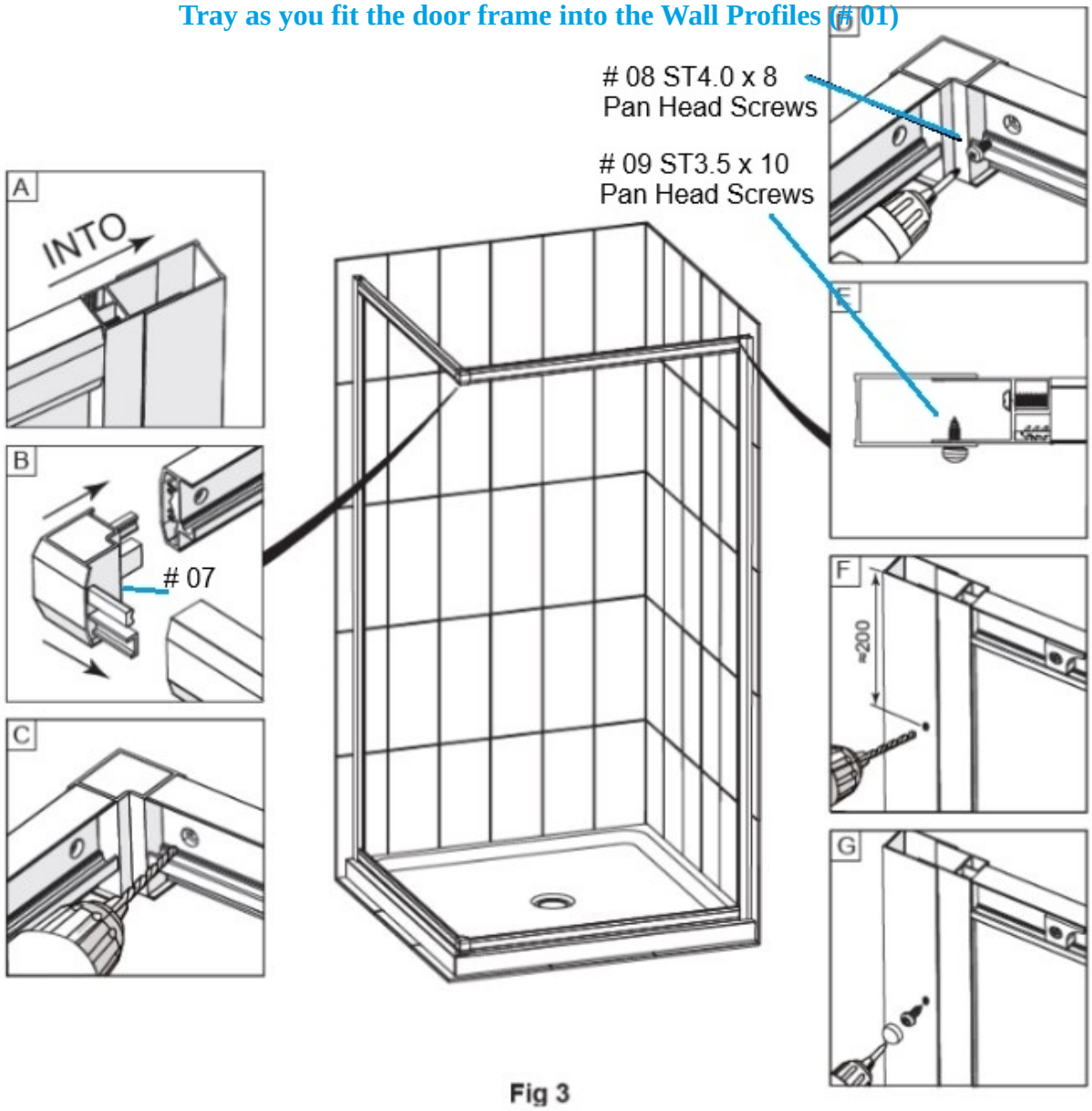

Fig 3

Installing the Stationary Glass

STEP 4: Installing the Stationary Glass

1) Stand the Stationary Glass(11) into the slot of the **Glass Profile(04)** (A as below)
2) Insert the **PVC Strip(12)** between the **Stationary Glass(11)** and the upper guide rail. (B as below)
3) Drive a ST4.0X16 **Countersunk Screw(14)** through the corresponding holes in **Guide Rail(05)** and **Glass Clip(13)** to clamp the glass at both the top and bottom. (C & D as below)
4) Pack the **Single Sided Strip(15)** between the **Glass Profile(04)** and **Stationary Glass(11)** using a soft-head tool. (as in E & F below)
5) Install the second **Stationary Glass(11)** in the same way.

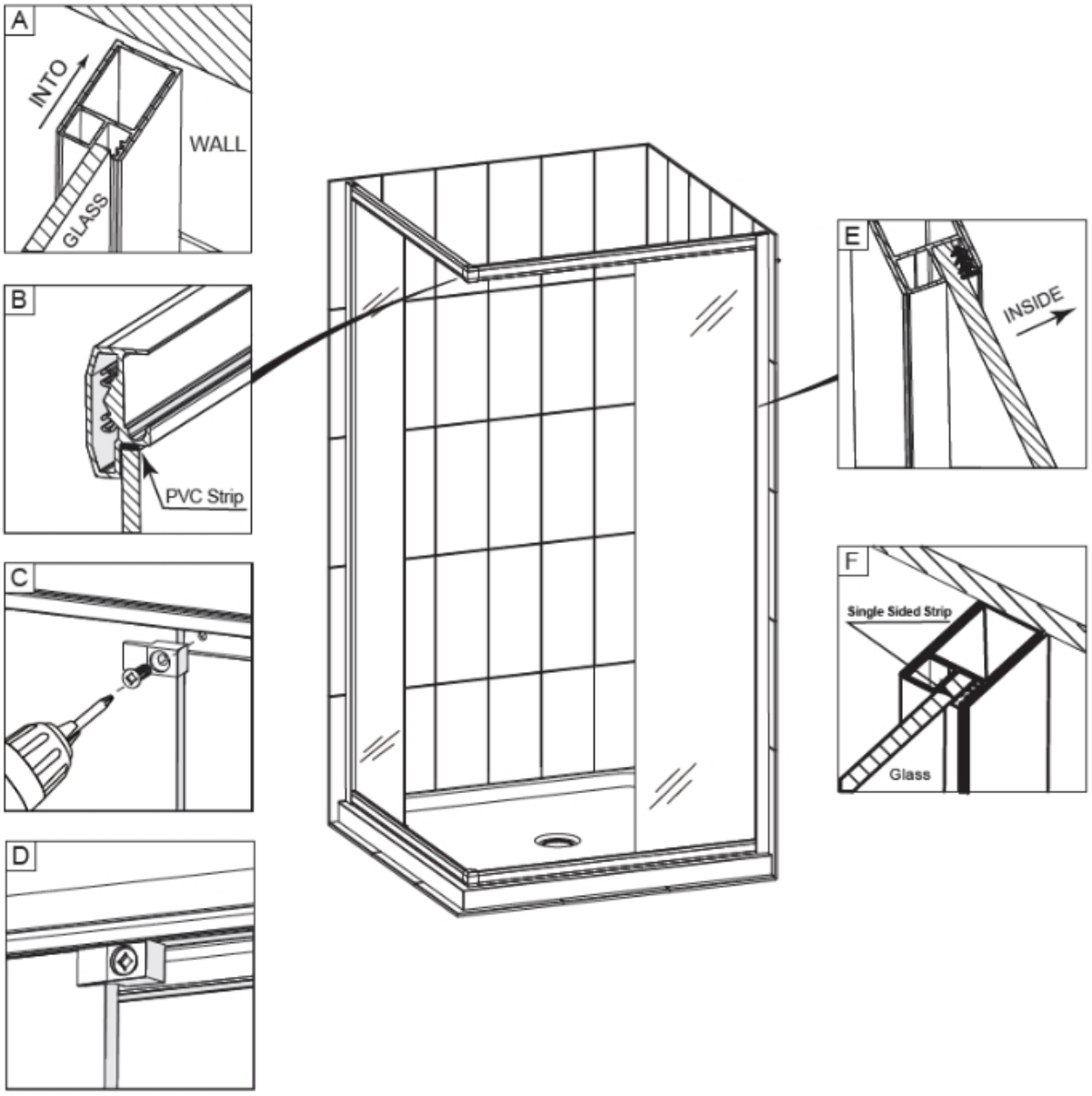

Fig 4

Installing the Doors

STEP 5: Installing the Doors

1) From inside the shower enclosure, hang the Door Assembly(16) the upper rollers in the track of the **Guide Rail Assembly(05)**. (A as below)
2) From outside the shower enclosure fully depresses the bottom roller's locking buttons hooking the bottom rollers into the track of the **Guide Rail Assembly(05)**. (B as below)
3) Repeat steps 1-2 to install the other door.

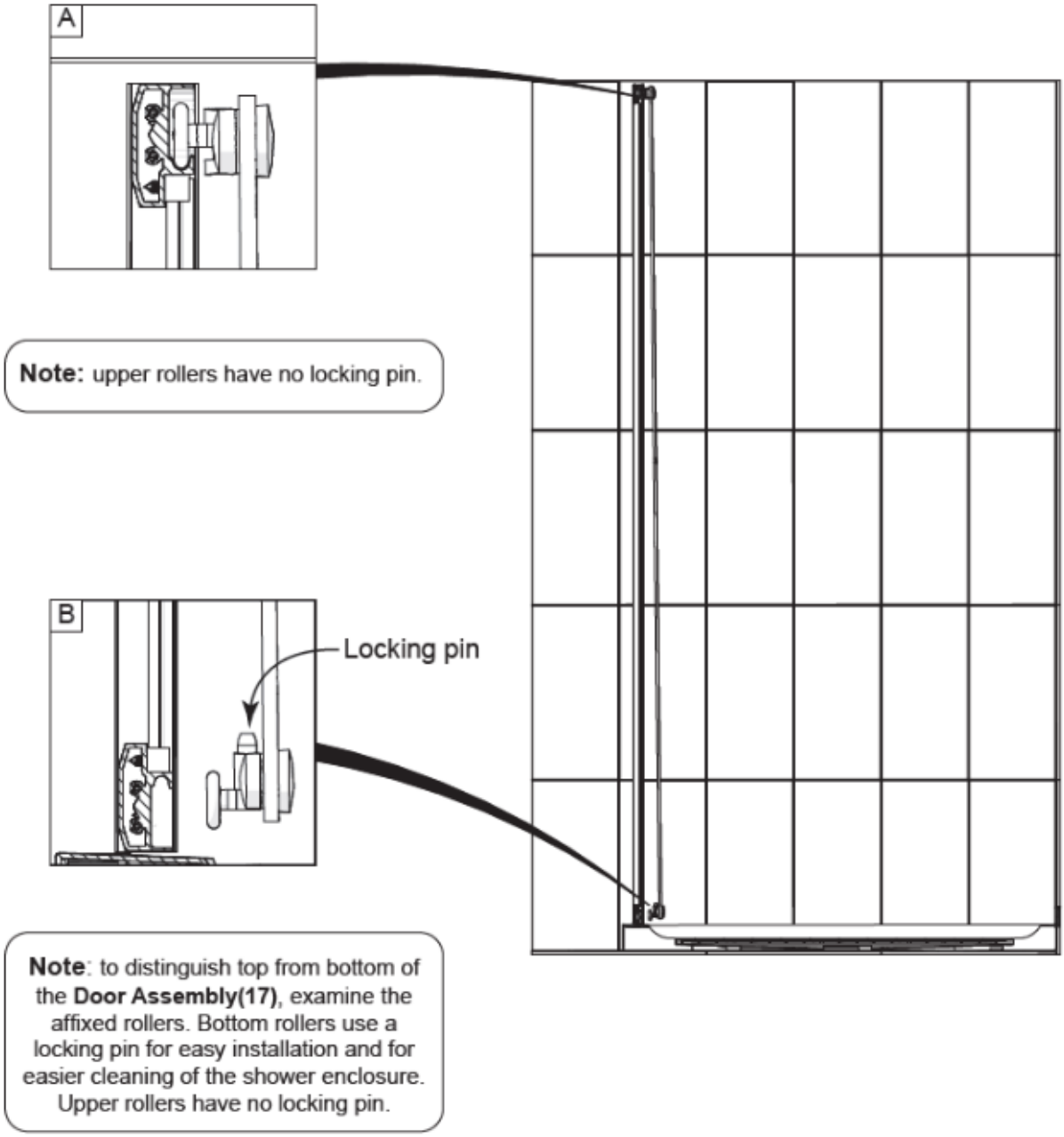

Fig 5

Installing the Shower Door Seals

STEP 6: Installing the Shower Door Seals

1) Press the **Middle Seal Strip (17)** onto the **Stationary Glass(11)** exposed edge. Work from bottom to top, ensuring that the lower end is flush with the **Guide Rail Assembly(05)**. (A & B as below)
2) Press the **Middle Seal Strip (17)** onto the **Door Assembly(16)** along the wall-facing edge. Work from bottom to top. The lower end must be flush with the lower edge of the glass. (C as below)
3) Mount the **Magnetic Strip(19)** symmetrically onto the **Door Assembly(16)** apex edge, flush with the bottom of the glass, and parallel from top to bottom. (D as below)
4) Repeat steps 1-3 to attach strips on the other side of the shower enclosure.

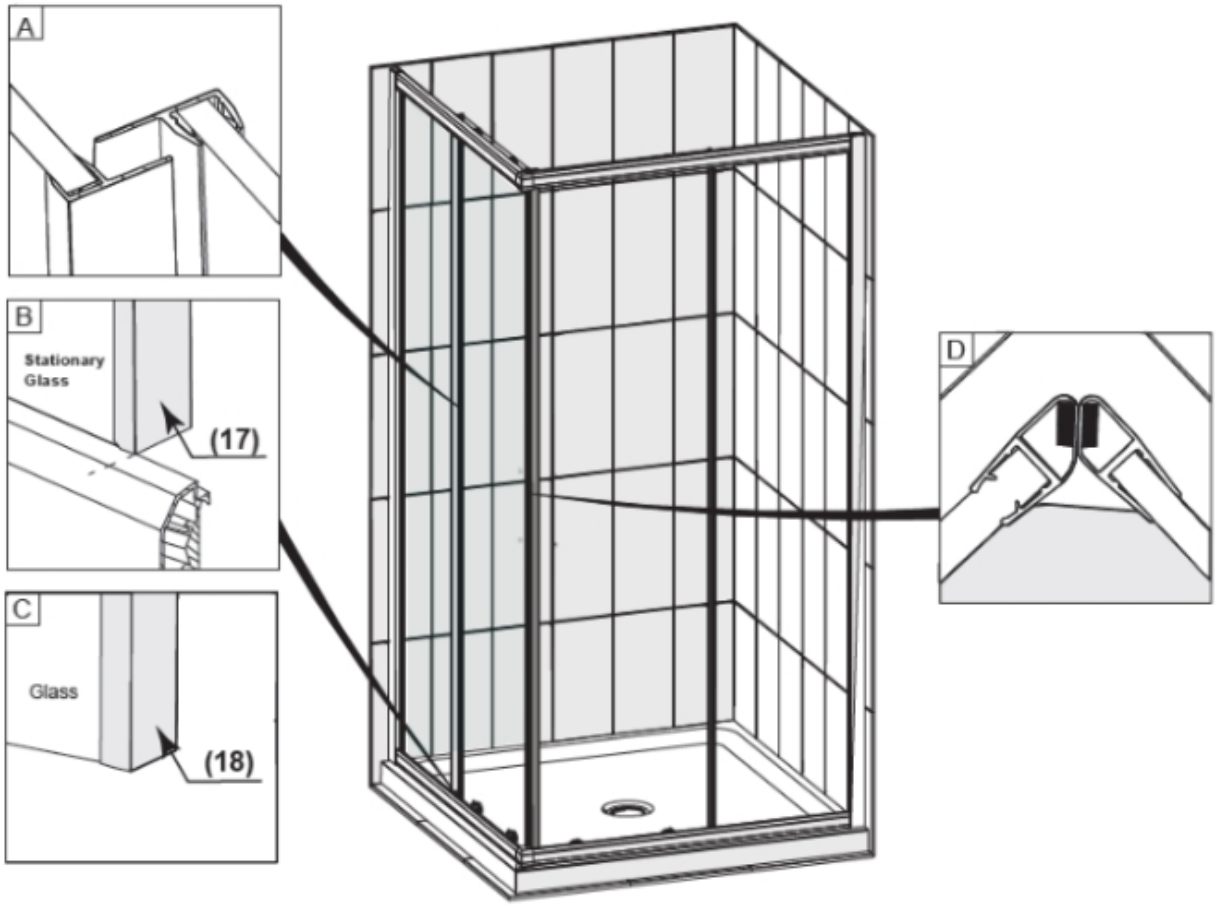

Fig 6

Fitting Door Handles

STEP 7: Fitting Door Handles

1) Disassemble the **Handle Assembly(20)** and reinstall onto the glass door as shown. (A&B as below)

- Handle bar faces to the outside of the shower enclosure.
- Inside the shower enclosure:Install large knob on top.

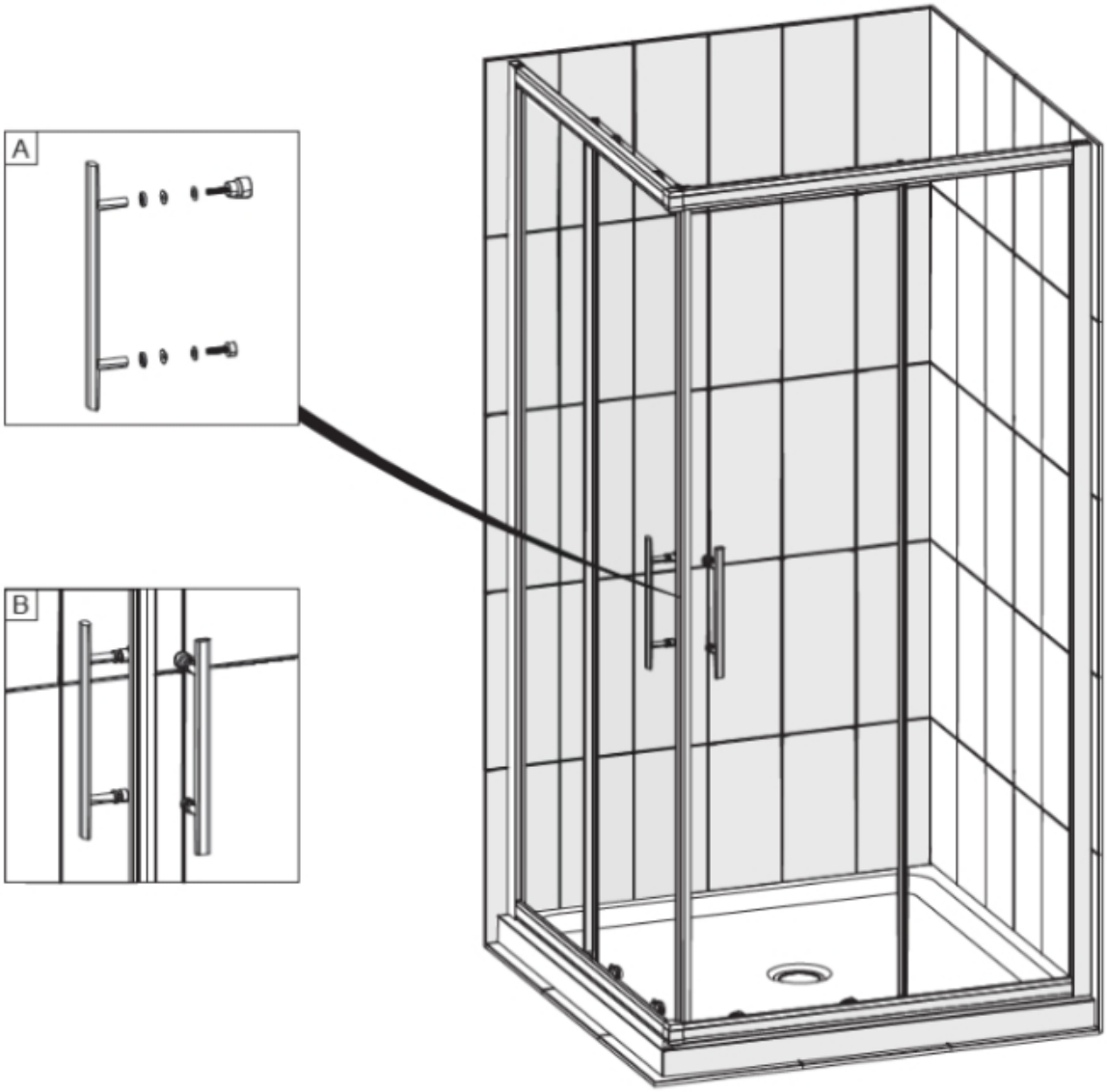

Fig 7

Sealing the Shower Doors

STEP 8: Apply Silicone to the OUTSIDE of the Door

The surfaces need to be clean and free of debris before applying Silicone Sealant (not Supplied). Seal the **OUTSIDE EDGES ONLY** of the frame to your wall lining.

If you are using our 4 Lip Shower Tray you will not need to Seal along the bottom of the door or return. If you want to fill the gap please go to https://www.henrybrooks.co.nz/product/4-lip-shower-tray-seal/ to buy the Tray Seal.

NOTE: No Silicone should be applied to the INSIDE EDGES of the shower

SHOWER MAINTENANCE

GLASS: To ensure long lasting life for your glass shower products: wipe them off after each use with a soft cloth. Rinse and wipe the glass using either a soft cloth or a squeegee to prevent soap buildup and water spots (hard water can etch the surface of the glass over time if left to dry). To prevent scratching the surface: never use abrasive cleaners or cleaning products that contain scouring agents. Never use bristle brushes or abrasive sponges that may scratch the surface.

HARDWARE: To ensure a long lasting finish: wipe the metal parts after each use with a soft cloth. Do not use abrasive cleaners or cleaning products containing ammonia, bleach, or acid. If accidentally used, rinse the surface as soon as possible to prevent damage to the finish (peeling or corrosion). After cleaning the polished finishes, rinse thoroughly and wipe dry with soft cloth. Clean stainless steel surfaces at least once a week.

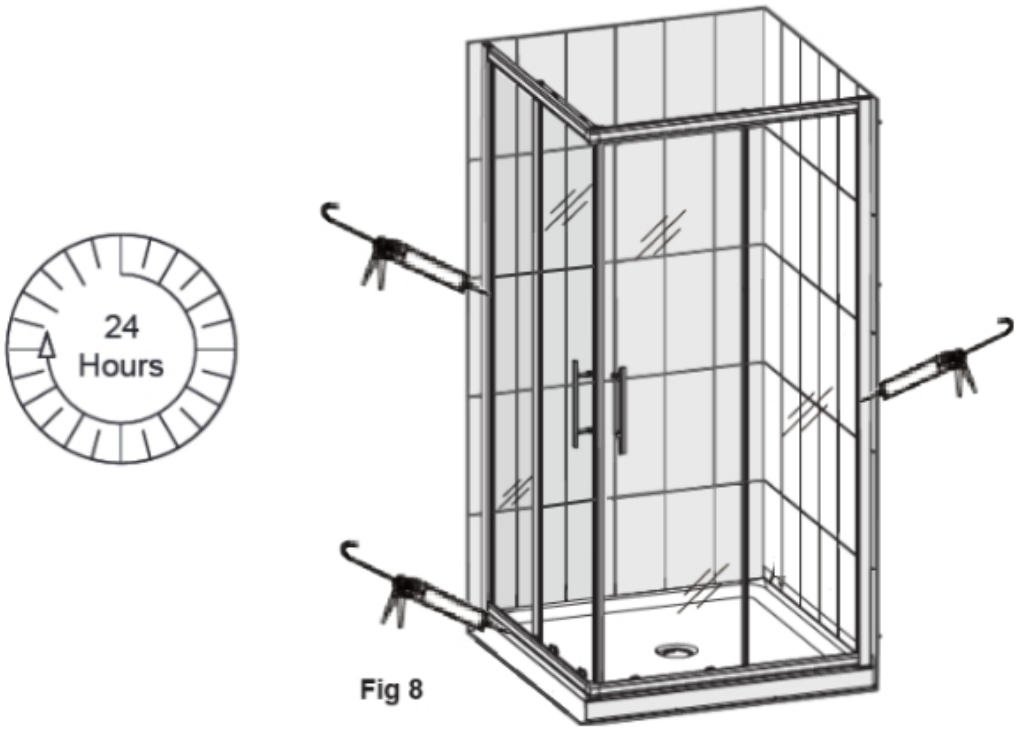

Fig 8

The surfaces need to be dry and free of debris before applying silicone
Leave to dry for 24 hours before use

Congratulations, You have now achieved a Professional Standard Installation of your shower door.

Ph: 09-913-3110
116A Harris Road
East Tamaki, Auckland
sales@henrybrooks.co.nz
www.henrybrooks.co.nz