Collesium Shower Door Installation Guide



900mm Curved Shower Door installations

1830 and 1950mm high

Thank you for your Order

Ph: 09-9133110
116A Harris Road. East Tamaki
Auckland
sales@henrybrooks.co.nz
www.henrybrooks.co.nz

Preparation

Our products are designed to be safe, sanitary, and effective. Please read carefully the following instructions before installing your shower enclosure. If you have any questions on this shower enclosure installation, please call your local supplier.

Our product may include changes without prior notice.

A. After opening all the boxes, read this introduction carefully, and verify that all packed parts are complete by cross checking all components against the “Shower Door Components (Pg5)”. Examine for shipping damage. If the unit has been damaged or has a finishing defect, please contact your local supplier within 3 days.

B. Please note that you should consult your local building codes regarding installation and compliance standards. Building and plumbing codes vary by location, and your local dealers or distributors are not responsible for code compliance standards for your project.

C. Use a competent and licensed (if required by local code) plumber for all plumbing installation.

D. Please ensure that prior to installation the floor or shower tray step is level, if it is not level you will need to be very careful with installing the glass panels and may have other issues. Also make sure the walls are at right angles to the floor step. While some adjustment of the frame to the wall is possible, irregular floor level or improper angle of the side walls will result in issues for your installation.

Notes

Some adjustments and drilling will be necessary during the installation process.

Some of the tools below may not be needed for your specific installation.

Tools you may require

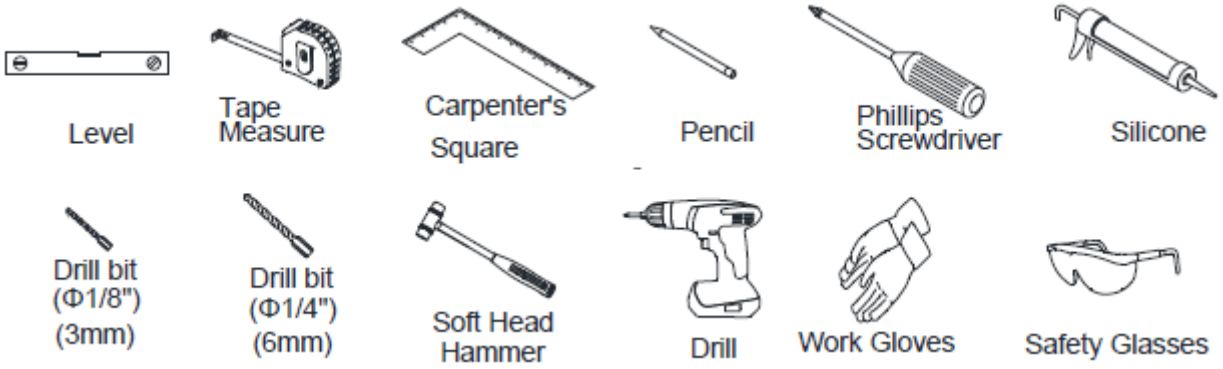

Recommended Wall Framework

To ensure a stable shower door installation we recommend installing extra framework where your shower door contacts the wall as shown in the image below.

With the shower tray in place determine the position of any extra framing.

To see separate tray and liner instructions, go to link below

https://www.henrybrooks.co.nz/installation-instructions/

In this image the Std framing is lighter in colour and the extra recommended framing is in the darker colour.

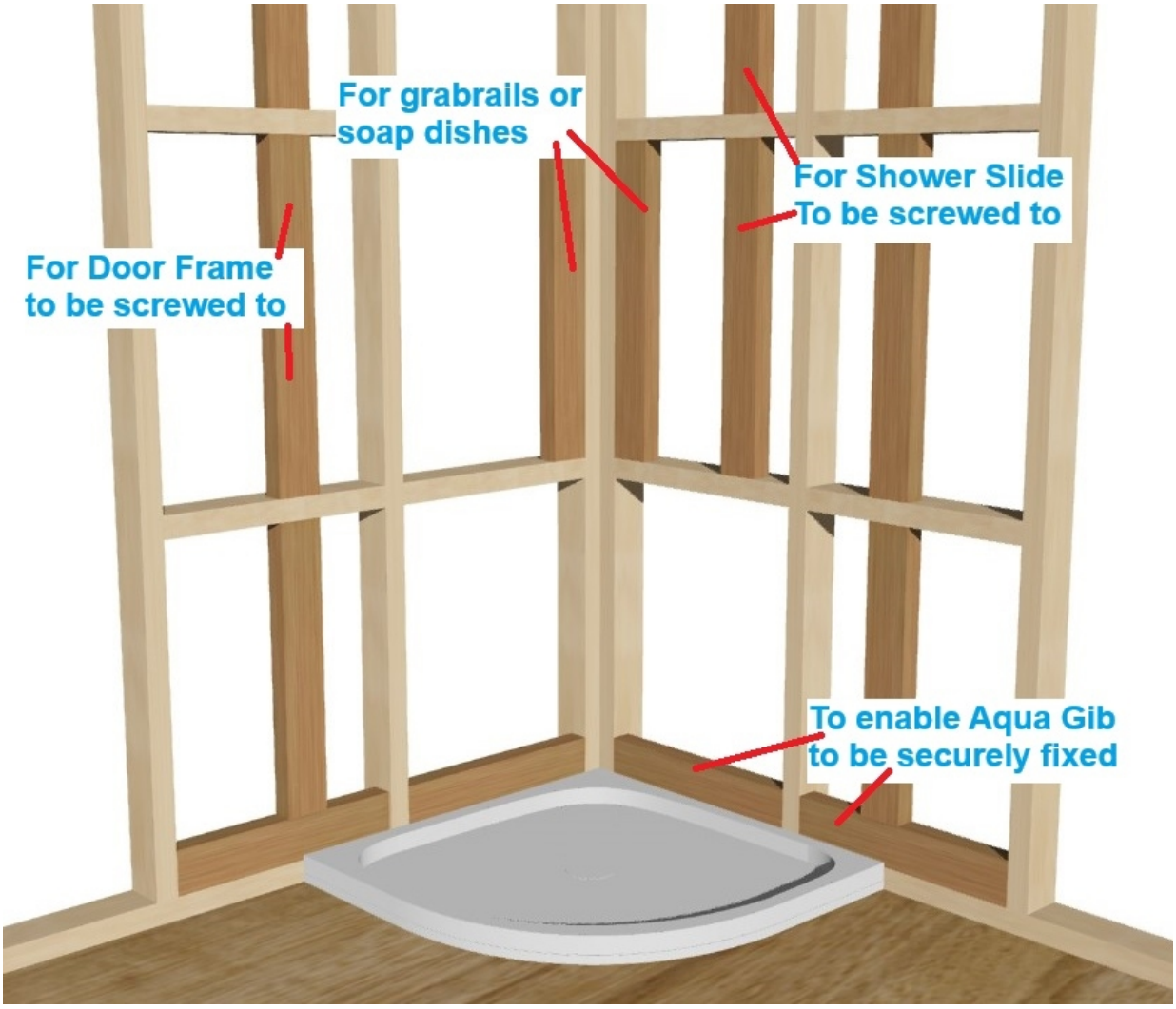



For further info on Shower tray preparation and install

Click on (or copy and paste into a browser)

https://www.youtube.com/watch?v=K38V9-wUvHg

Recommended before you start

You should consult your local building codes on questions on installation compliance standards.
Building and plumbing codes vary by location, and our local dealers or distributors are not responsible for code compliance standards for your project.

Caution!

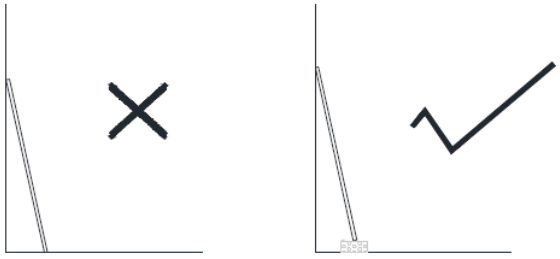

Supplied Wall anchors are for use on concrete walls and are NOT required for standard timber stud construction installations where appropriate wood has been fitted.

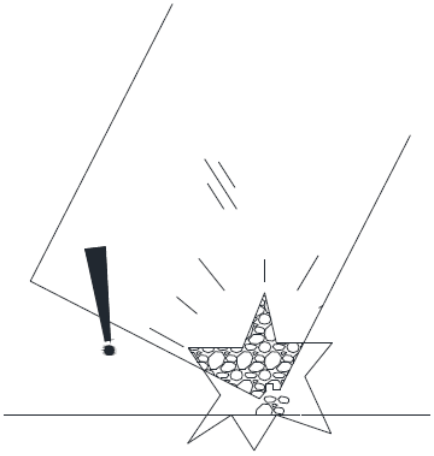

Please Note

The glass panels are tempered Safety Glass to the NZ/AS 2208.1996 safety standards.

When leaning them against a wall always protect the bottom edges and do not knock a corner against a hard surface as the glass panel may shatter.

These instructions assume that your plumbing, shower tray and wall linings are already installed level, plumb and square.

Installation Sequence

1st - Install the wall channels
2nd - Install the Door Frame
3rd - Fit the Fixed Glass Panels
4th - Fit the 2 Sliding doors

Collesium Shower Door Components

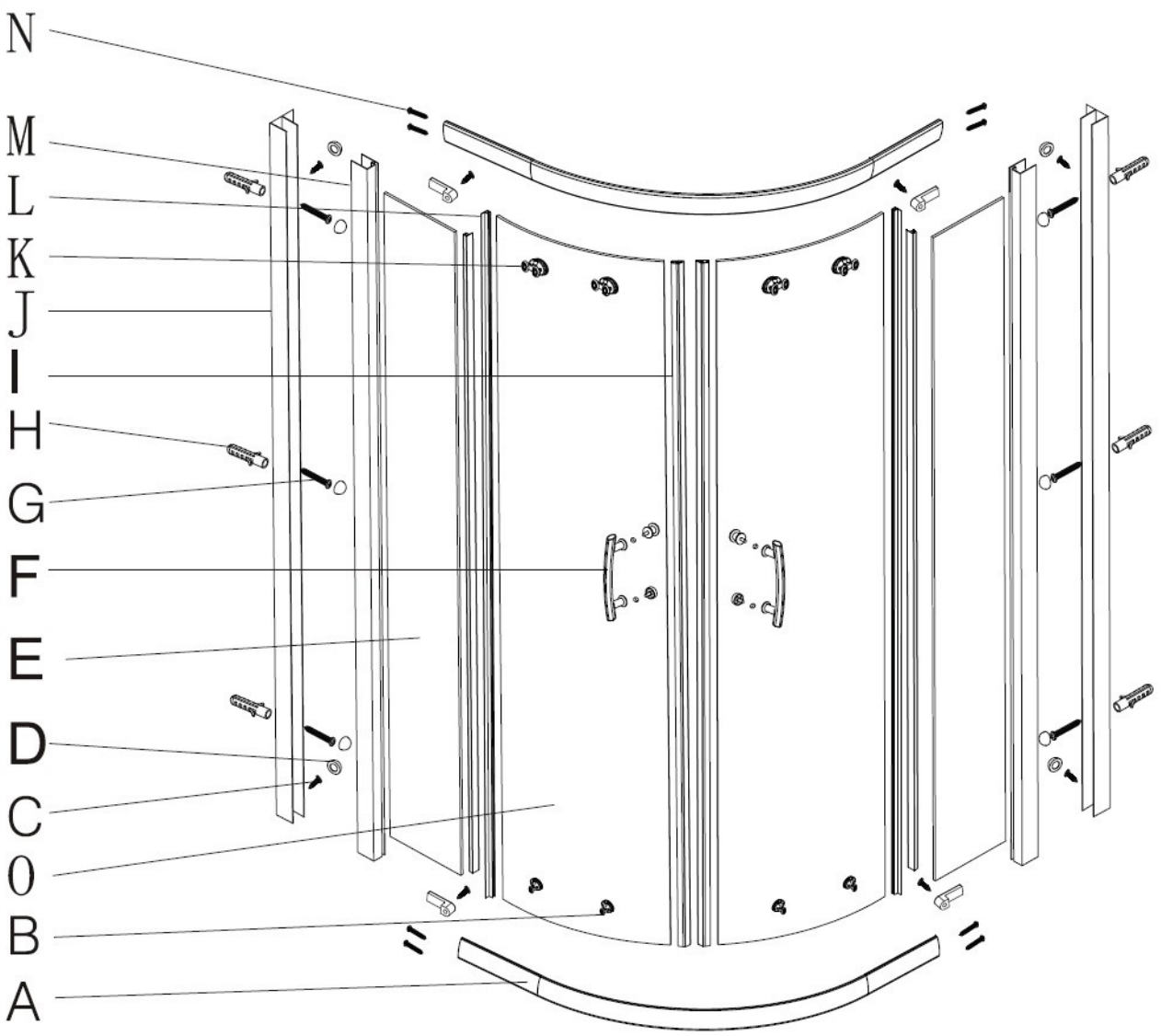

Fitting Wall Channels

Step 1

Fix **1st Wall Channel (J)** vertically against the inside front edge of the shower tray upstand, ensuring the flange faces the inside of your shower. Smear the wall side of the channel with silicone before fitting. **Ensure the wall channels are vertical and plumb**.

We recommend fixing through the middle of the channel as this will secure the channel to the wall better Fix the **2nd Wall Channel (J)** to the other side wall in the same manner as in the first image

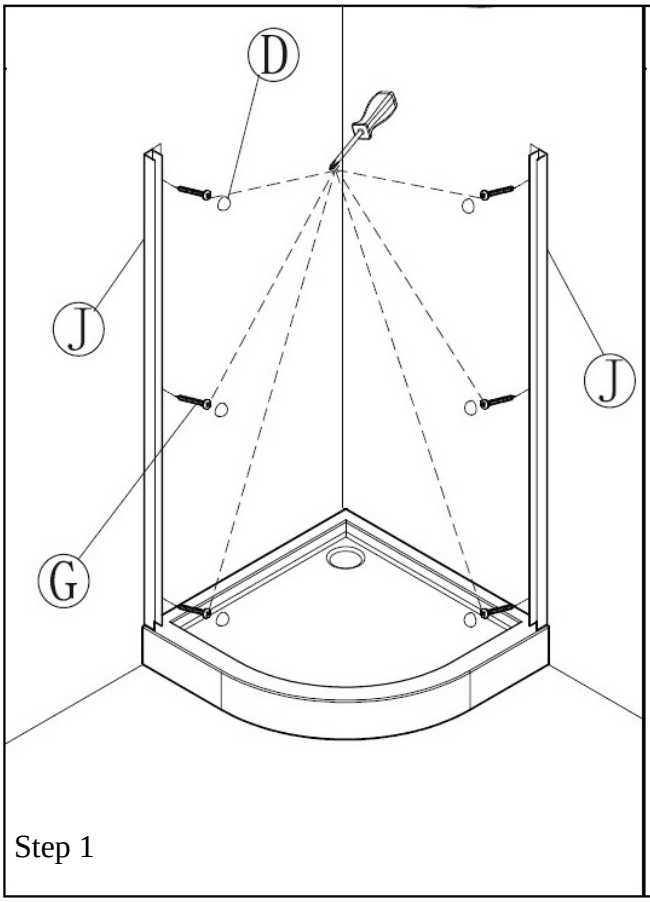

Step 1

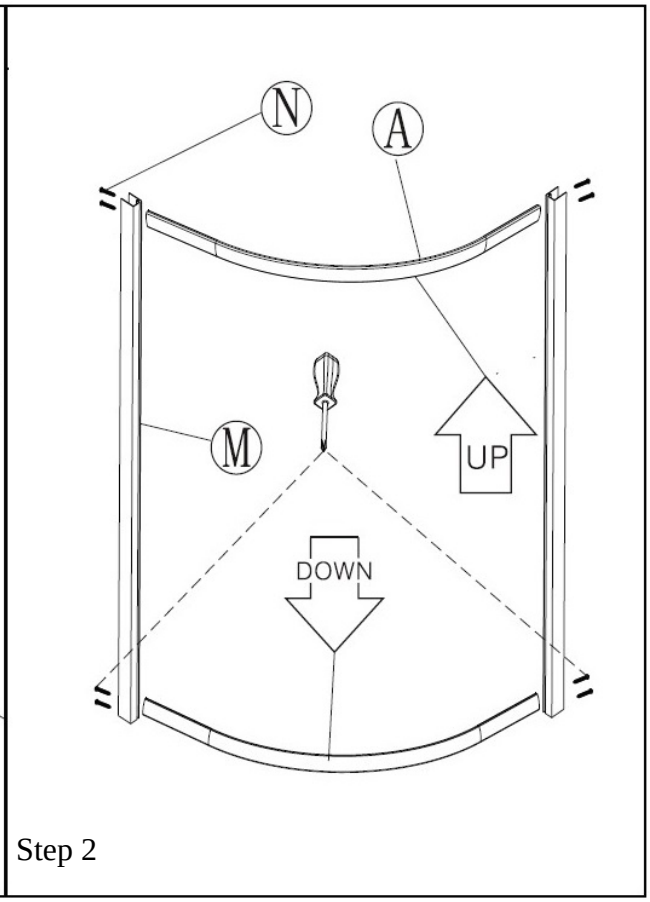

Step 2

Step 2

Assemble Top and Bottom **Curved Rails (A)** to **Side Channels (M)** using screws provided as shown in the diagram above right.

Note that the door is reversible, meaning the top and bottom are identical. Please ensure the tracks remain on the inside and vertical curve of **(A)** on the outside

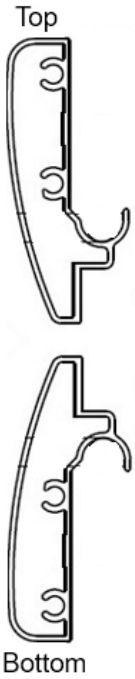

Fitting Door Frame to Wall Channels

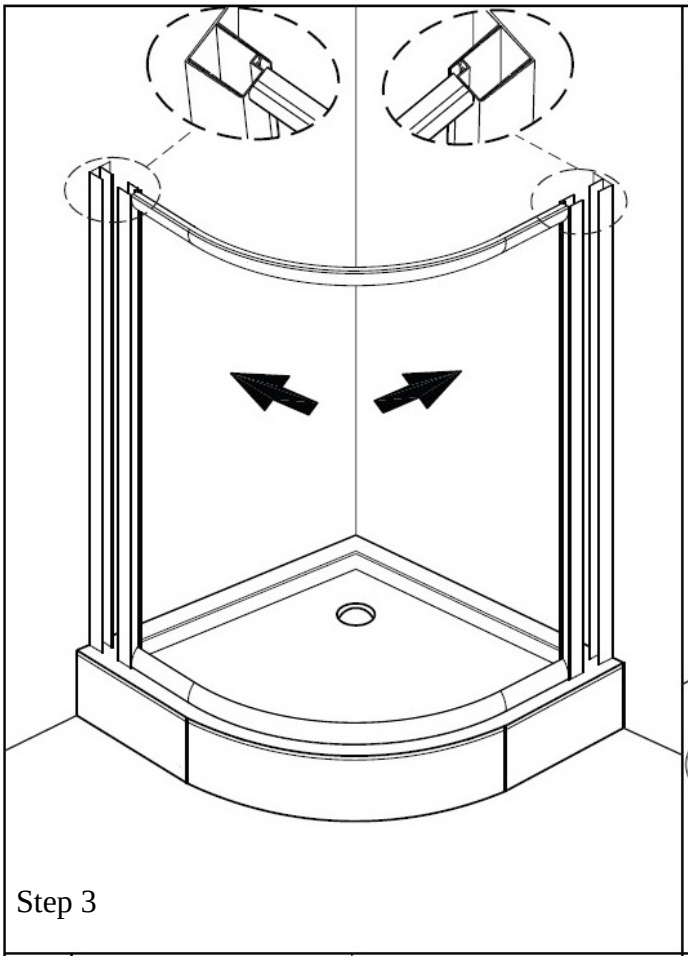

Step 3

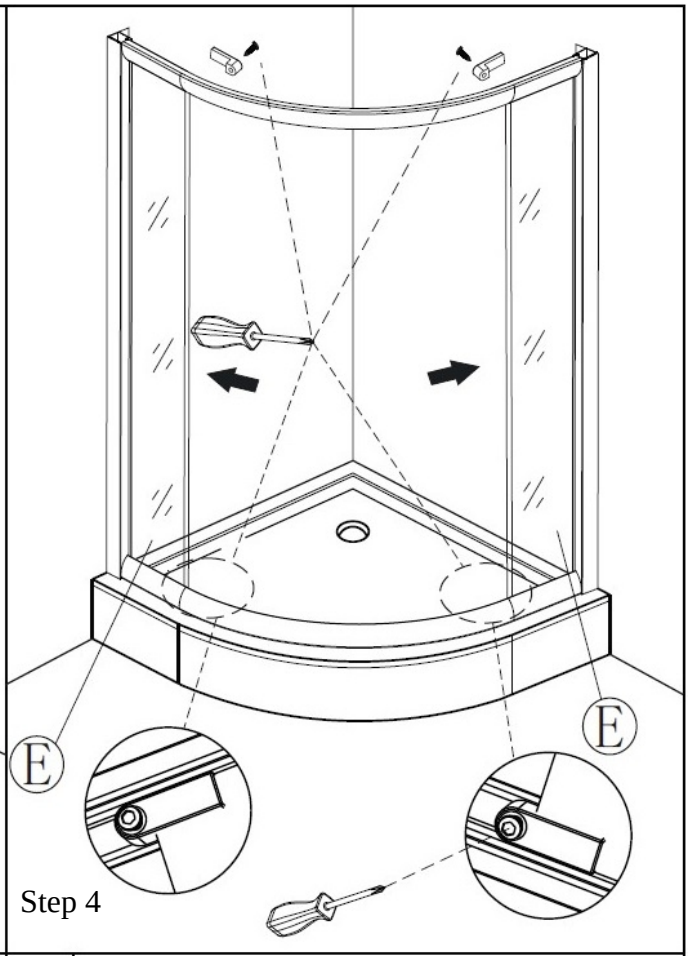

Step 4

Step 3

Insert the curved door frame into both of the channels as shown in the left image above.

Centralise the door **within** the fixed wall channels **(J)** so that the door is equidistant on both sides.
Fix the door frame **(M)** to the wall channels **(J)** on both sides with the short screws supplied **(C)** and **(D)**

Step 4

Lift the 2 flat Glass panels **(E)** into the frame (handle the glass with care) securing in place both top and bottom with supplied fixing into pre-drilled holes as shown in image above right.

Fitting Seals and Wheels to Doors

Step 5

Push 2 F flaps onto the fixed glass **(E)** with the ‘flap’ to the inside and hard down to the bottom as shown in the lower left image below.

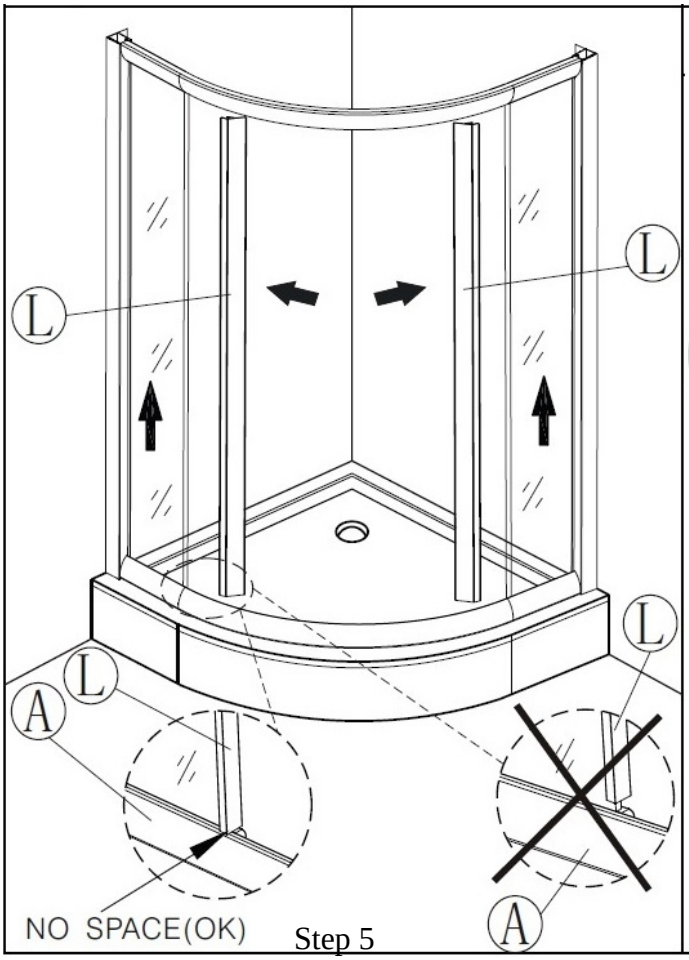

Step 5

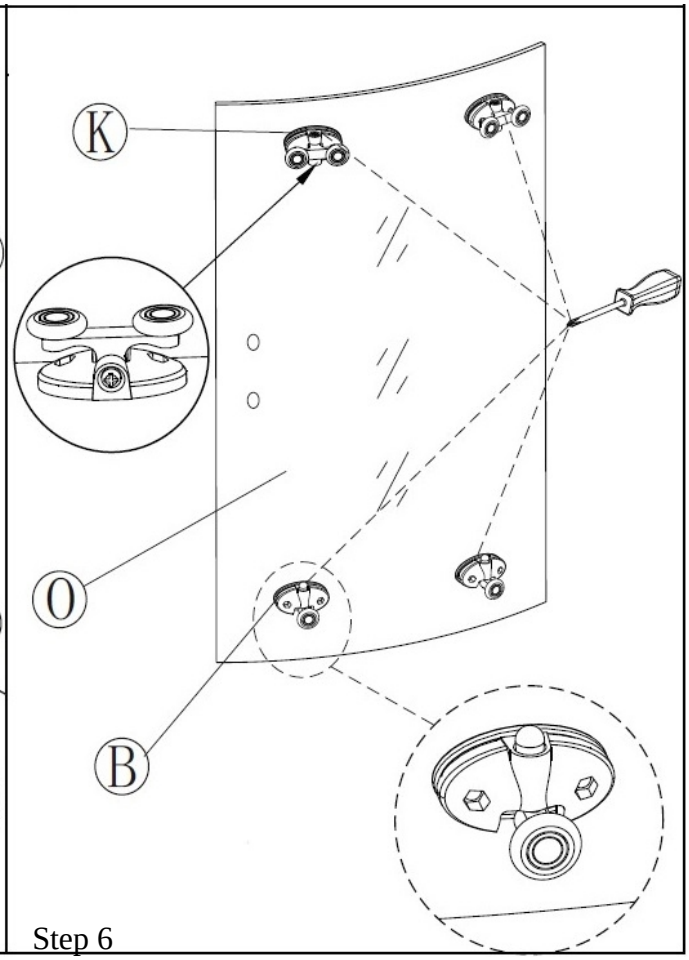

Step 6

Step 6

Fit wheel sets **(K)** top and **(B)** bottom to Curved Glass **(O)** with wheel on the outside curve, Wheel sets with push buttons go to the bottom.

When fitting the top wheels **(K)** ensure the adjusting screw faces down (so you can adjust if need be later).

It will be helpful to fit the handles **(F)** in place before lifting the doors into place.

Hanging Doors into Door Frame

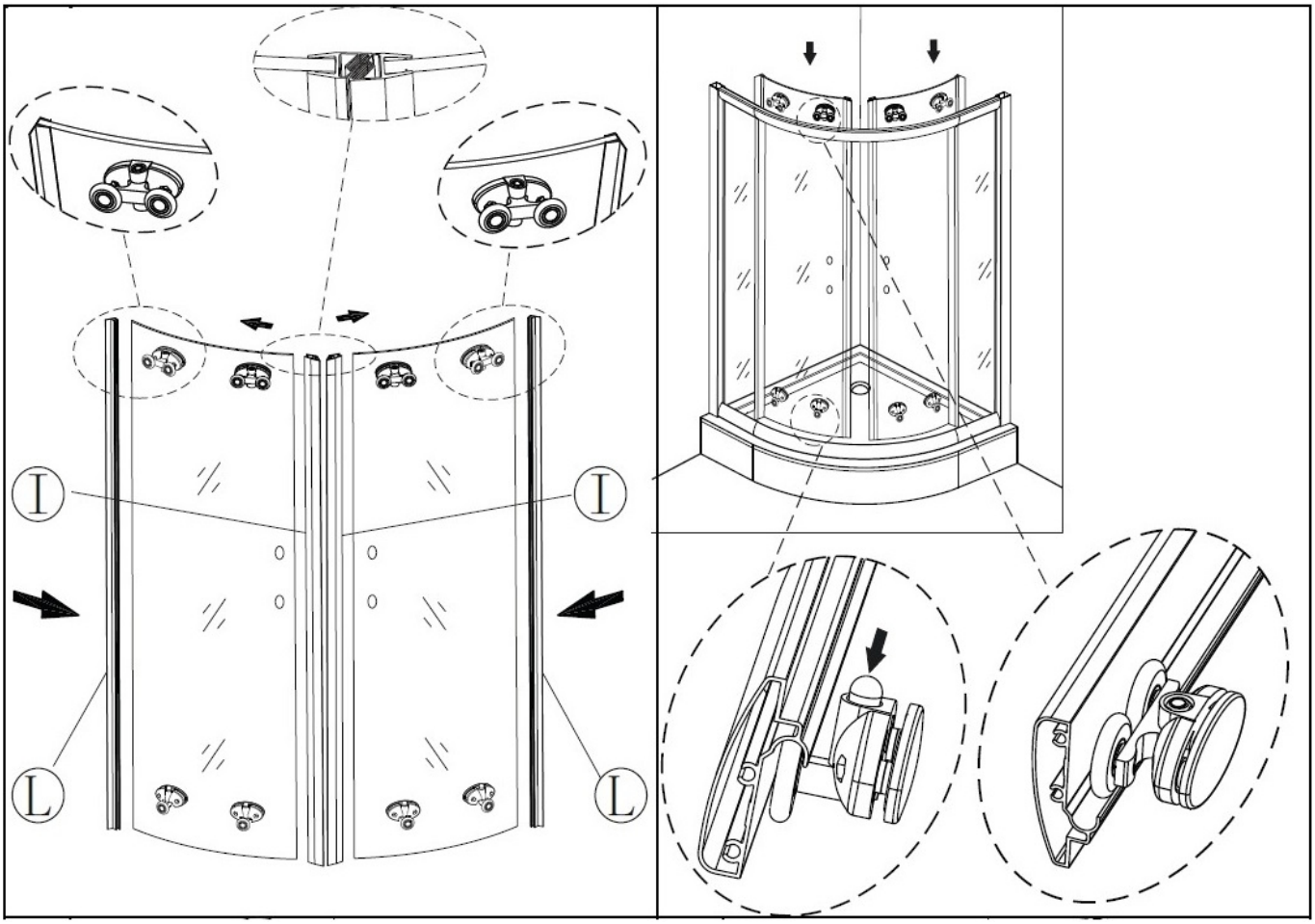

Step 7

Lift the Doors into place hanging them from the top track first then pushing the buttons on the bottom wheels to get them under the lower track.

Now push the Magnetic door seals onto each door.

Adjusting Shower Doors

Step 8

Adjust doors from the top wheel sets to get them hanging vertically and the magnets meeting parallel to each other.

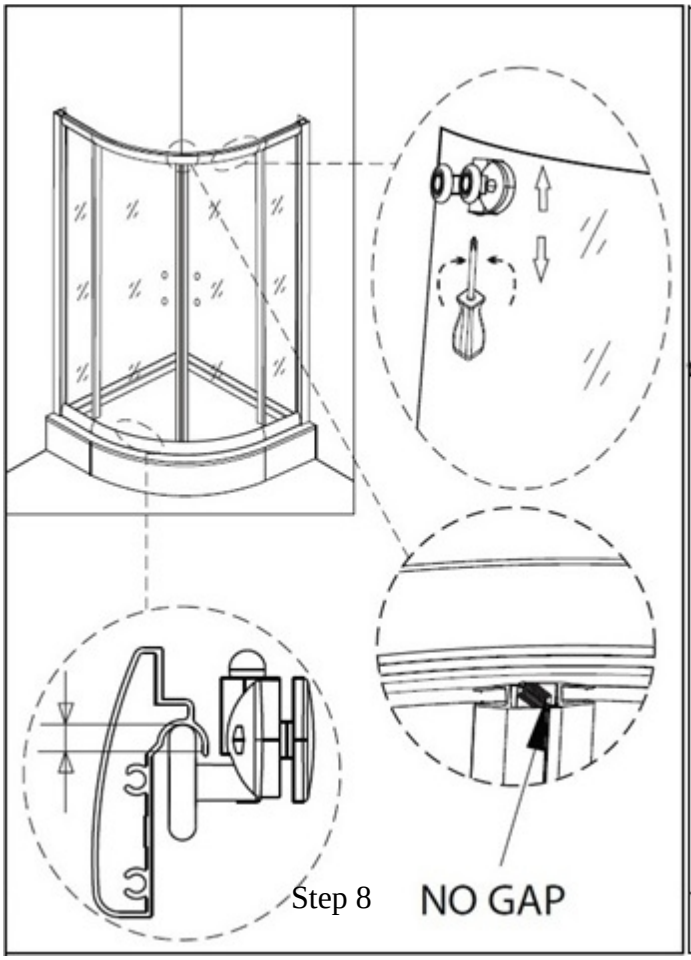

Step 8

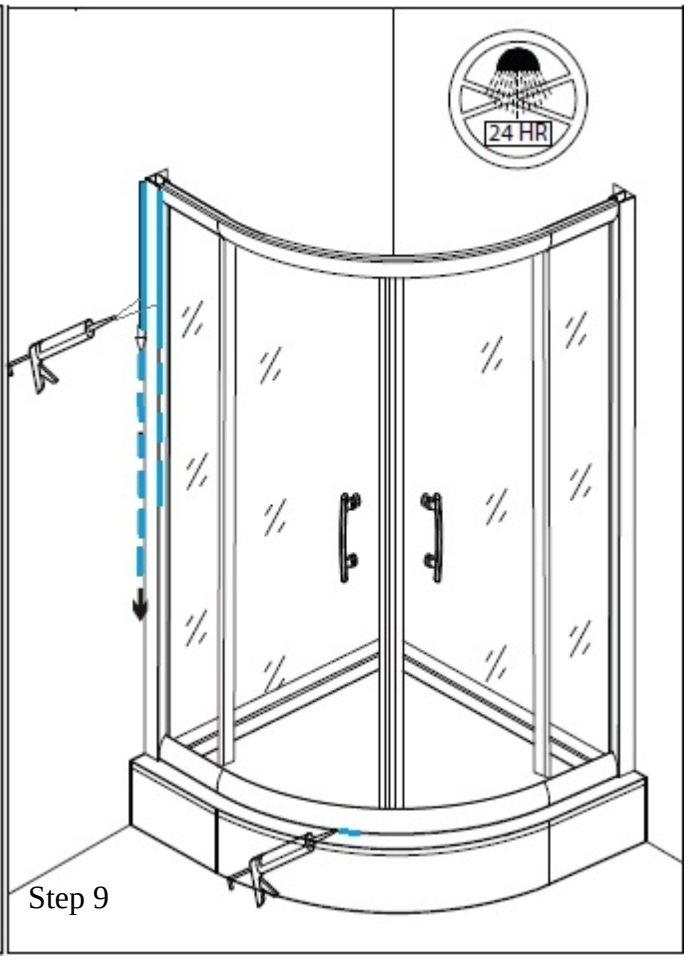

Step 9

Sealing Frame to Shower and Walls

Step 9

The surfaces need to be clean and free of debris before applying Silicone Sealant (not Supplied).

Seal the OUTSIDE EDGES ONLY of the frame to your wall lining.

If you are using our Continuous Lip Shower Trays you will not need to Seal along the bottom of the door

If you want to fill the gap please go to

https://www.henrybrooks.co.nz/product/4-lip-shower-tray-seal/ to buy the Tray Seal.

NOTE: No Silicone should be applied to the inside edges of the shower

Allow 24 hours for the silicone to cure before using the shower.

Congratulations, You have now achieved a Professional Standard Installation of your shower door.

Ph: 09-913 3110
116A Harris Road. East Tamaki
Auckland
sales@henrybrooks.co.nz
www.henrybrooks.co.nz